MECHANICAL (C&W) DEPARTMENT
SEALDAH DIVISION

Mechanized Laundry Setup of 4T Capacity at Sealdah Depot

Two (2) Ton capacity Mechnized Laundry setup at Sealdah Coaching depot for providing good quality proper wash linen items to the passengers for their satisfaction. This laundry plant started its functioning on & from 04/04/2011.

Augmentation of Mechanized Existing Laundry to increase the capacity from 2 Ton to 4 Ton already done to increase the capacity of production for providing good quality wash linen to more passengers.

MECHANISED LAUNDRY OUT-TURN PER MONTH

Month	2023-24	2024-25	2025-26	2026-27
Apr	377541	439813	492610	522033
May	410355	473025	517850	
Jun	393914	477955	517853	
Jul	382309	477333	528208	
Aug	349851	460050	523469	
Sep	348844	433493	503210	
Oct	391657	453495	560313	
Nov	390348	476333	534876	
Dec	408092	478224	544017	
Jan	404306	499751	535153	
Feb	393822	447120	501216	
Mar	46999	518872	560049	522033
Avg/Mon	**392504**	**469622**	**525669**	**522033**

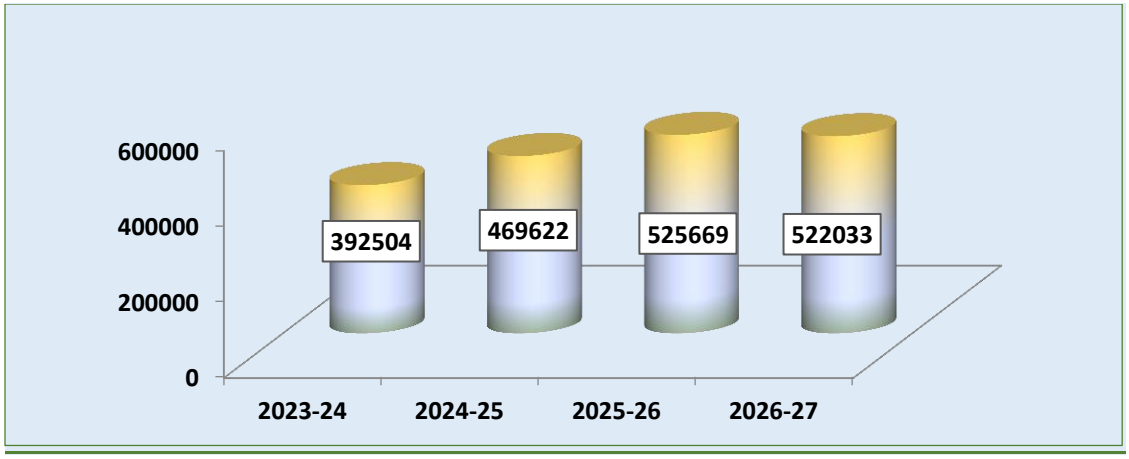

DETAILS OF TRAIN SUPPLY OF LINEN WASH BY MECHANISED LAUNDRY SEALDAH.

The washing quality of Sealdah Mechanized Laundry is highest standard & quite satisfactory. These linens are being supplied to the following trains.

- ✓ 12313/14 – Sealdah – New Delhi Rajdhani Express
- ✓ 12259/60 – Sealdah – New Delhi Duranto Express
- ✓ 22201/02 – Sealdah – Puri Duranto Express
- ✓ 12343/44 – Sealdah – New Jalpaiguri Darjeeling Mail
- ✓ 12377/78 - Sealdah – New Jalpaiguri Padatik Express
- ✓ 13153/54 – Sealdah – Maldah Town Gour Express
- ✓ 12329/30 – Sealdah - Delhi WB Sampark Kranti Express
- ✓ 12379/80 – Sealdah – Amritsar Weekly Express
- ✓ 13149/50 – Sealdah – Alipur Duar Jn. Kanchan Kanya Express
- ✓ 13141/42 – Sealdah – New Alipurduar Teesta Torsa Express
- ✓ 13185/86 – Sealdah – Jaynagar Gangasagar Express
- ✓ 13163/64 – Sealdah – Saharsa Jn. Hate Bazare Express
- ✓ 22317/18 – Sealdah – Jammu Tawi Humsafar Express

FIRE PROTECTION SYSTEM AT SEALDAH MECHANIZED LAUNDRY.

It is essential to provide fire protection system for safety aspect of Linen items as they are always fire prone. Thus this system has been installed.
Mechanized laundry Sealdah deals with Washing & Supply of huge quantity of Bed sheets, Pillow cover, Hand towel, Bath towel, Blanket cover etc. All dry linen items are being kept in rack and floor area in a regular measure inside the Mechanized Laundry area.

Fire detection and protection system has been installed at Sealdah Mechanized laundry. The system was inaugurated by AGM/ER, DRM/SDAH along with all branch officers on 04/10/2018.
The Fire protection system will work automatically in case of any fire incident.
This system will help in safe-keeping linen items from fire as the Fire protection System will work on its own whenever any fire is detected.

SETUP OF STEAM CONDENSATION PLANT AT MECHANIZED LAUNDRY PLANT PREMISES

This plant has been setup for Condensation of exhaust Steam of mechanized laundry equipments & there after this hot water directly supplied to under slang stores tank for re-used as feeding to boiler to save fuel (HSD Oil) consumption. This project was installed by C&W/SDAH supervisors & staffs. In-house materials are used except rotary pump for this project. A huge amount saved by C&W/SDAH.

OPERATION OF SEALDAH MECHANIZED LAUNDRY

Entry of Dirty linen

Segregation of dirty Linen

Washing chemical

Loading of linen in washer cum extractor

Washing of linen

Stretching of Linen before calendaring

Before Calendaring/Ironing of linen

After Calendaring/Ironing of linen

Folding of linen

After folding

Packaging of linen

Linen Ready to dispatch

Mechanized Laundry Setup of 5T Capacity at Kolkata Depot

Work - **Shed with room (20mX35m - Brick wall)**
Sanctioned Year: 2017-18, LB item No: 585 of 2019-20
Cost (in thou): Civil- 8433, Elect: 1430
Execution agency: Sr.DEN/Co/SDAH. HQ- PCE/KKK.

Work – **Supply, installation & commissioning of Laundry equipments**
Sanctioned Year:- 2017-18 OT/PH-53
LB item No: 724 of 2019-20
Cost (in thou):- 24642(in thou)
Execution agency: Sr.DME/SDAH. HQ- PCME/KKK.

The following laundry equipments are supply, installation, commissioning & performance testing at Kolkata Terminal, CP.
Material received on 30/9/19.
Installation work started on date 06.02.2020.
Mechanized Laundry completed successfully and commissioned on 25/06/2020.

Machine	Capacity	Qty
Heavy duty Big washer cum extractor	130 Kg.	2Nos.
Heavy duty small washer cum extractor	70 Kg.	2Nos.
Industrial Tumbler Dryer for towels	70 Kg.	2Nos.
Flatwork ironer with steam heating	3000x800mm. 25m run per minute	1 No.
Small flat work ironer with steam heating	1500x800mm, 25m per minute	1 No
Air compressor	Min-15CFM, Pressure-9 Kg/cm^2	1 No.
Oil fired, horizontal, multi tibuler 3 pass fully wet back shell and tube boiler	Evaporation capacity:1000 Kg/hr. Working pressure-10.54Kg./Cm^2, Thermal effency-88± 2% Oil consumption- 56 ltrs/hr.	1No.
Steam boiler,(vertical, HSD oil red)	Evaporation capacity:600 Kg/hr, Working pressure-10Kg/Cm^2, Thermal effency-88±2% Oil consumption- 34 ltrs/hr.	1 No.
Industrial water softening plant with accessories	Vessel dia-770mm, Working pressure -1.5 to 3.5 Kg/cm^2	1 set
Water feed pump	Capacity-3hp, Head-upto 76mtrs, Discharge-49LPS	2 No.
Wet, dry linen trolley SS with castor wheel	LxBxW- 40x30x34(inch)	12 No.
Feeding, Folding tables- SS with castor wheels	LxBxW - 90x30x34 (inch)	6 No.
Electrical fittings for Mechanized Laundry	Turnkey	LS

MECHANISED LAUNDRY OUT-TURN PER MONTH: KOAA

Month	2023-24	2024-25	2025-26	2026-27
Apr	149236	186213	245260	315159
May	171793	196741	265774	
Jun	166759	198686	267316	
Jul	149401	205792	266459	
Aug	157119	201828	254577	
Sep	160959	192193	237352	
Oct	161868	207837	309276	
Nov	172800	210144	289997	
Dec	181803	226939	301782	
Jan	175141	216811	292300	
Feb	168644	221206	276347	
Mar	187828	231402	328878	
Avg/Mon	**166946**	**207983**	**222355**	**315159**

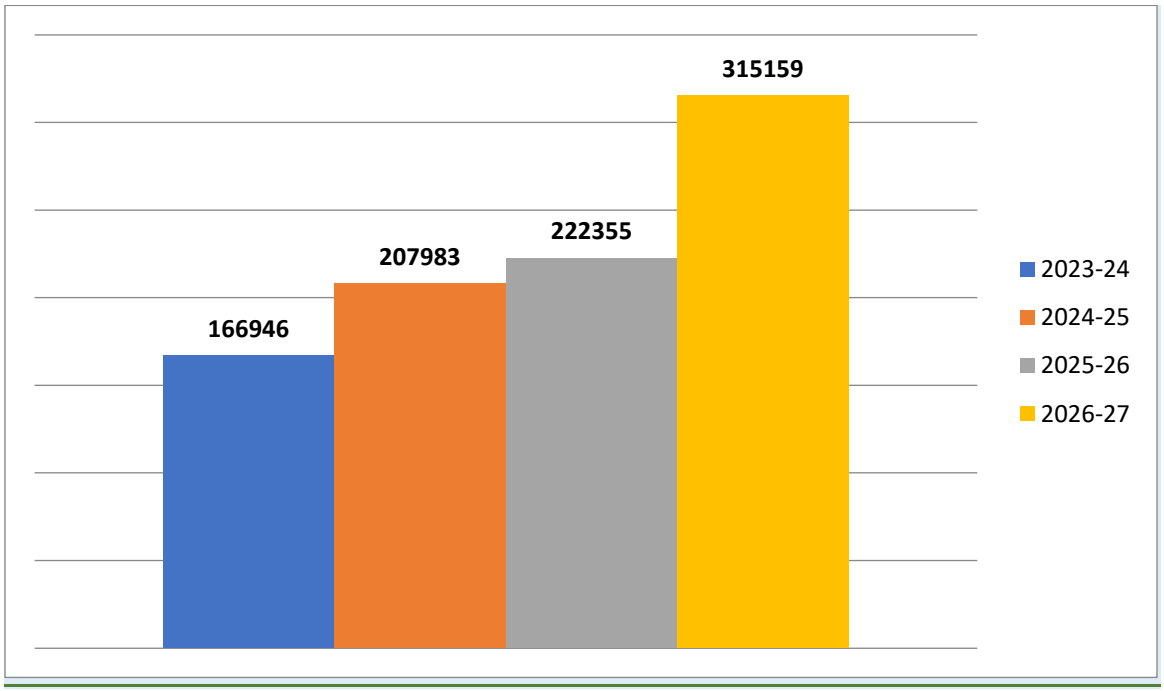

MECHANIZED LAUNDRY AT KOAA:

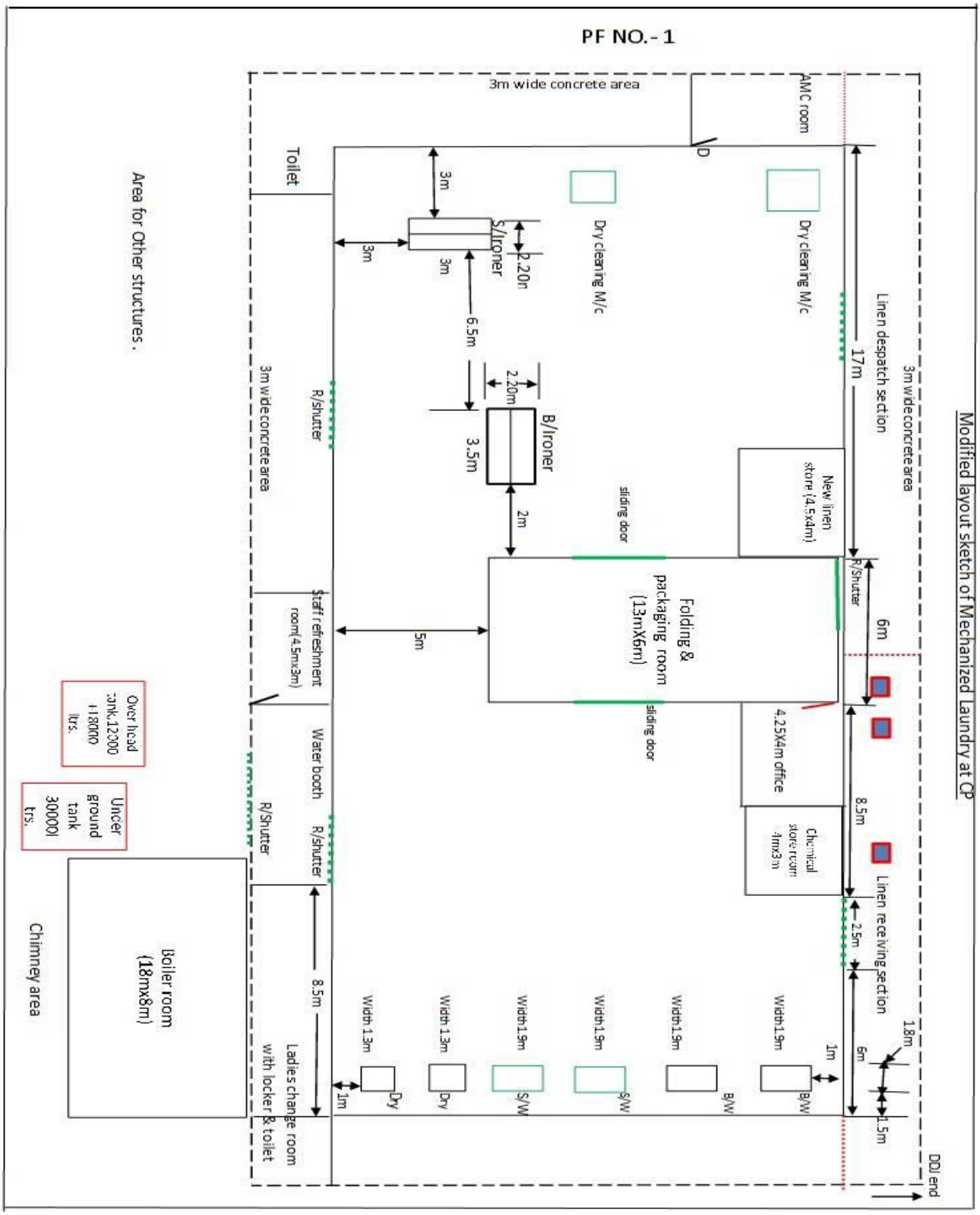

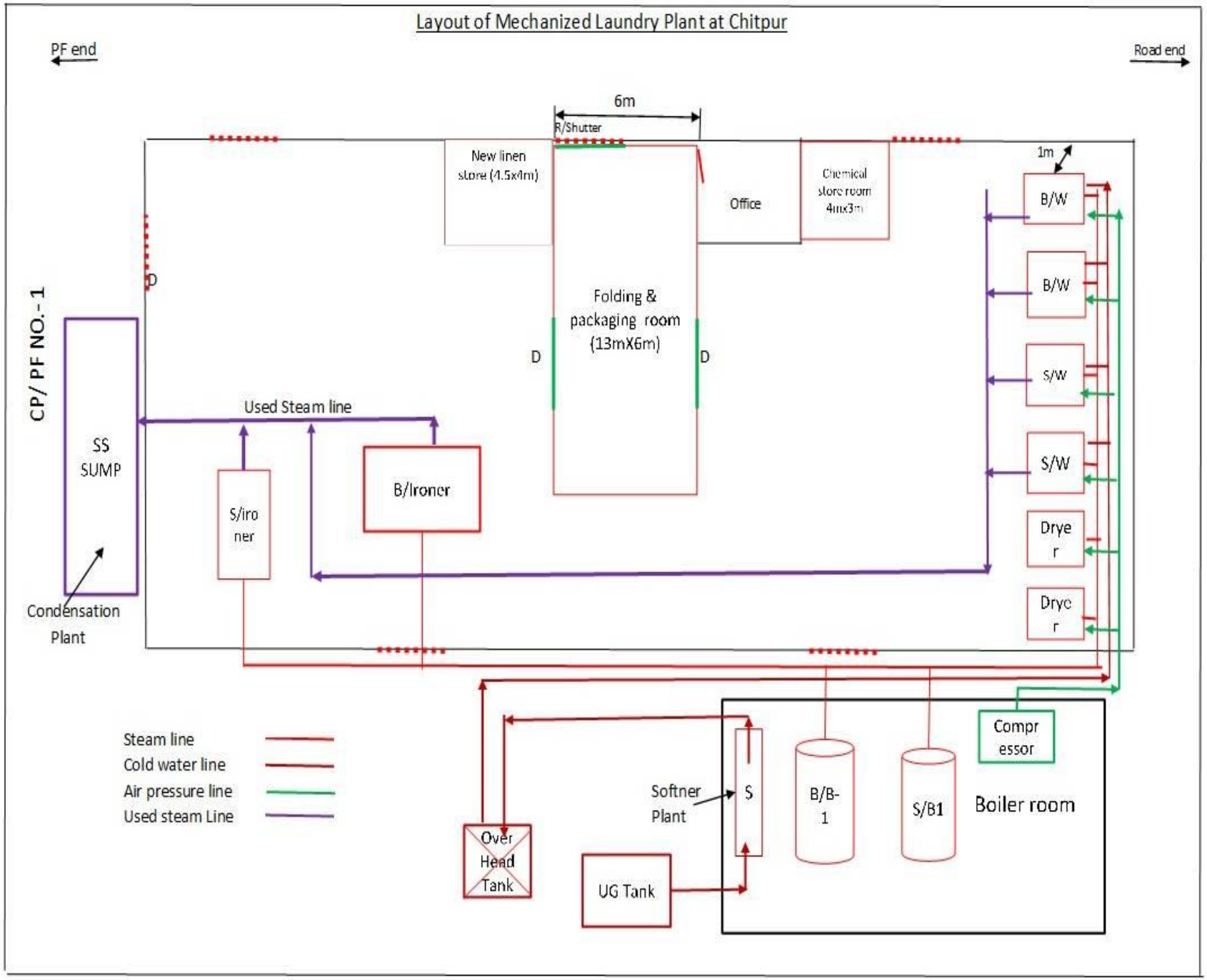
Layout of Mechanized Laundry Plant at Chitpur
PF end
Road end
6m
R/Shutter
New linen store (4.5x4m)
Office
Chemical store room 4mx3m
1m
B/W
B/W
S/W
S/W
Drye r
Dryc r
Folding & packaging room (13mX6m)
D
D
D
CP/ PF NO.- 1
SS SUMP
Condensation Plant
Used Steam line
S/iro ner
B/Ironer
Steam line
Cold water line
Air pressure line
Used steam Line
Over Head Tank
UG Tank
Softner Plant
S
B/B-1
S/B1
Boiler room
Compr essor

SOME IMPORTANT PHOTOGRAPH OF OPERATION OF KOLKATA TERMINAL MECHANIZED LAUNDRY

Industrial Big Washer Extractor for Bed Sheet

Industrial Big Washer Extractor for Bed Sheet

Industrial Washer Extractor for Pillow Cover & Towel

Industrial Washer Extractor for Pillow Cover & Towel

Industrial Tumbler Drier for

Industrial Tumbler Drier for

SOME IMPORTANT PHOTOGRAPH OF OPERATION OF KOLKATA TERMINAL MECHANIZED LAUNDRY

Towel

Industrial Big Flat work Ironer

Towel

Industrial Small Flat work Ironer

Small Industrial Boiler

Industrial Big Boiler

Water softener Plant

Mechanized Laundry Chitpur.

Washing of Bed roll item was started from 15-09-2022 at Mechanized laundry, Chitpur by M/s Band Box Ltd. Capacity of Mechanized Laundry is 02 TON/Shift for supply of KOAA base trains. At present average production per day is 5000 packet.

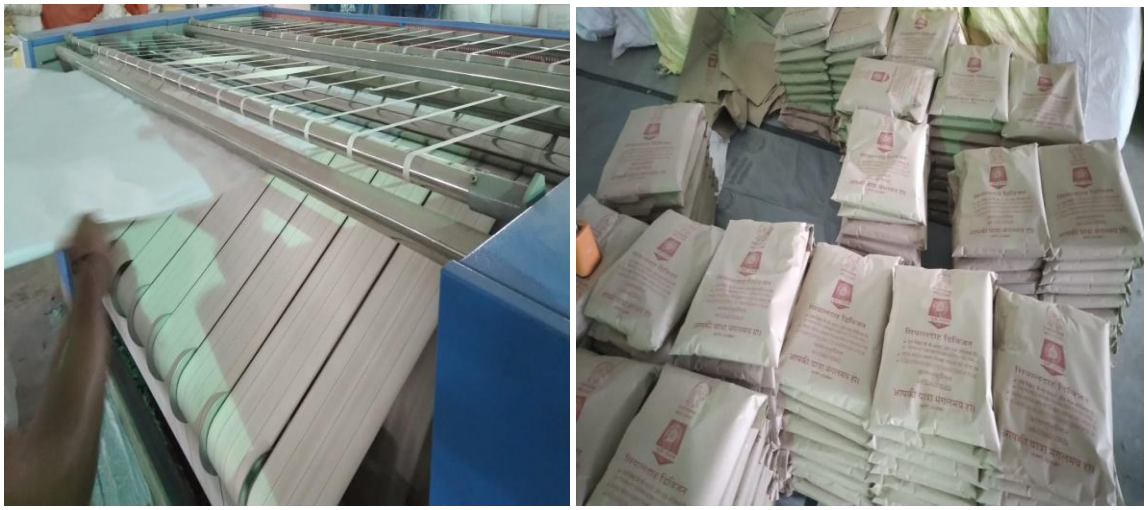

AUTOMATIC COACH WASHING PLANT AT CHITPUR

AUTOMATIC COACH WASHING PLANT AT CHITPUR

SALIENT FEATURE

SN	Item	Technical features
1	1st Automatic Coach Washing Plant in Eastern Railway	Kolkata Terminal
2	Manufacturer	M/s HYT Engineering Company Pvt. Ltd.
3	Length of The Plant	61500 mm.
4	Total Width of the plant	13000 mm.
5	End to end Cycle time for Cleaning a train of 24 Coaches	Not exceed 15 minutes.
6	Speed range during Cleaning	3 - 5 Kmph.
7	Consumption of water	290-300 Liters / Coach. (Including Fresh water)
8	Consumption of Fresh water	58 - 60 liters/Coach.
9	Consumption of Detergent	0.073 - 0.075 Liters/Coach.
10	Consumption of Alum powder	8 - 10 grams/Coach
11	Consumption of Poly Electrolyte	0.25 - 0.5 grams/Coach.
12	Consumption of Chlorine	3 - 5 CC.
13	Power Consumption	220KW

ADVANTAGES OF COACH WASHING PLANT OVER MANUAL COACH WASHING

SN	Traditional Manual Coach Washing	Automatic Coach Washing Plant
1	No consistency in quality of wash: differs from coach to coach and rake to rake.	Consistent washing quality will be assured.
2	Labour intensity work; hence subjected to industrial relations problems of absenteeism, discipline, dirty work, etc.	Only one operator is required in 8 hrs shift for supervision of plant due to its automatic nature of operation.
3	The time taken for washing is quite long i.e. 3 hrs. for a train of 24 coaches. Rake availability for passenger services is much less which is a waste of scarce national resources.	The time taken of washing is quite less i.e. approx. 5 minutes for train of 24 coaches. Faster availability of rake for passenger services.
4	Washing Platforms are required on both sides of a train for its entire length. As more time is taken, many of such platforms are required to meet traffic requirements. The consumes lot of space and is capital intensive.	Automatic coach washing plant can be installed on the yard line leading to the depot ensuring washing of trains one after another without consuming additional space. Washing is done when the train is moving at a speed of 5 to 8 kmph.
5	Approximately 9600 ltrs of fresh water is used for washing one train of 24 coaches	Approximately 1440 litters of fresh water will be supplied by railway for washing of a train of 24 coaches. Remaining water will be re-cycled through Effluent Treatment Plant. Thisis a great saving in water consumption as water is scarcely available at many places.

SN	Traditional Manual Coach Washing	Automatic Coach Washing Plant
6	Uncontrolled application of detergent leads to use of excess quantity	Controlled application of detergent leads to consistent cleaning and optimum use.
7	Cost of washing a train of 21 coaches works out to be approximately Rs.3823/-.	Cost of washing a train of 21 coaches works out to approximately Rs.1332/-. Total saving achieved is Rs.2491/- Total saving per train = 2491/- If the depot is handling 06 trains of 21 coaches – Saving per day will Rs.2491 x 6 = 14946/- Saving per year will be Rs.14946 X 365 = Rs.50.55Lakhs.

AUTOMATIC COACH WASHING PLANT SET UP (COFMOW's AT No.COFMOW/IR/S-4685/P-I/G-677/11 dated 03.08.2011):

One Automatic Coach Washing plant for Sealdah was sanctioned under the work "Development of Coaching Maintenance Infrastructure at Sealdah" vide PB item no.577 in 2011-12. Total cost of Plan Rs.48102863.00.

Foundation Installation & Commissioning of Automatic Coach Washing plant at Kolkata Terminal under Sealdah Division.

- LOA for Automatic Coach Washing plant was issued by COFMOW to M/s HYT Engg. Co. PVT. Ltd. vide LOA No.COFMOW/IR/S-4685/P-1/G-677dated 03.08.2012.
- GA drawing approved on 19.10.2012.
- Site clearance for installation of Automatic Coach Washing plant Chitpur was given to M/s HYT Engg. Co. PVT. Ltd. on 09-05-2013.
- After completion of temporary linking of the short buffer line-1 with the placement line of pit, traffic block has been given from 26.12.2016.
- M/s HYT Engineering Company Pvt. Ltd. started foundation work on 26.12.2016 and completed on 25.05.2017.
- All materials for installation and commissioning of Automatic Coach Washing plant at Chitpur received on 13.04.2017.
- Installation work started from 25.05.2017 and completed on 07.10.2017
- Trial run conducted on:- 08.10.2017.
- Commissioned the plant on:- 08.10.2017.
- PTC Issued on: 21.12.2017.

INTRODUCTON TO AUTOMATIC COACH WASHING PLANT

The Automatic Coach Washing Plant is a multistage external system for coaches/trains using high pressure water jet, horizontal and vertical roating nylon and cotton combination brushes.

COFMOW had given order to M/s HYT Engineering Company Pvt. Ltd. for supply information & commissioning of Automatic Coach Washing Plant at Chitpur, Sealdah Division on Turnkey basis. An Effluent Treatment and water softening plant can be provided separately.

NEED FOR AUTOMATIC COACH WASHING PLANT

The Automatic Coach Washing Plant is able to achieve complete exterior cleaning of a rake of 24 coaches in about 15-20 minutes time while being placed on the pit line, for primary/secondary maintenance. Besides providing safe and reliable service to our esteemed passenger, it is also necessary for the Railways to offerthe convenience of neat and clean coaches.

Automatic Coach Washing Plant has been commissioned at Kolkata Terminal, Sealdah Division on Eastern Railway.

DETAILED FEATURES OF THIS PLANT:

- Thorough exterior washing of a 24-Coach rake is completed in 20 minutes as against approx. 5 hours required for manually doing the same job.
- Cleaning process is thorough including window sills, Venetian shutters and other areas where normally the manual cleaning process is wanting.
- Water recycling plant incorporate ETP and associated pumping arrangement result in 80% water getting recycled. Since otherwise also the water is more efficiently utilized the overall net water consumption is around 10-15 % of that required in normal manual cleaning process.
- Plant is located on shunting Neck with the provision of magic eye which ensures that plant operates only when the speed is between 5-8 kmph and consequently plant does not operate in case of normal shunting operation.
- Rake availability in case of Secondary and RBPC trains can improve significantly on account of above factor.
- With the all around water scarcity use of such plant may be inescapable.

TECHNICAL SPECIFICATIONS:

Washing Apron:

SN	Description	Parameter
1	Total Length of Apron	61500 mm
2	Centre distance between two column	4600 mm
3	Centre distance between washing pit line and buffer line at DDJ end	8500 mm
4	Centre distance between washing pit line and buffer line at Tala end	13000 mm Approx
5	Drain width	300 mm
6	Drain depth	600 mm
7	Motor (KW- 7.5/50Hz – 10/60 Hz, RPM- 1440 at 50 Hz & RPM- 1750 at 60 Hz)	16 nos.
8	Presently motor runs	50 Hz, but to run 60 Hz drive should be changed.

9	For upper & middle horizontal brushes, gap between bristle end and coach body At closed condition.	35 mm
10	Stroke of pneumatic cylinder for upper & middle horizontal brushes	65 mm
11	Bristle length	210 mm
12	For lower horizontal brush stroke of pneumatic cylinder	205 mm
13	Bristle length For lower horizontal brush	450 mm
14	Bristle length for half vertical brush	285 mm
15	Bristle length for full vertical brush	400 mm
16	Total nos. of nozzle	87 nos.

Pump House:

SN	Description	Parameter
i.	**Water Pump along with Motor Make: Kirloskar**	08 nos.
a)	**For Pump**	04 Nos.
1	head	80m
2	discharge	15 m^3/hr
3	Input	8.69KW
4	Speed	2925 RPM
b)	**For Motor**	
1	KW/HP	11/15
2	RPM	2930
3	Volt	415+/-10%.
c)	**For Pump**	04 Nos.
1	head	80m
2	discharge	09 m^3/hr
3	input	6.80KW
4	Speed	2920 RPM
d)	**For Motor**	
1	KW/HP	9.3/12.5
2	Speed	2880 RPM
3	Volt	415+/-10%.
ii.	**Detergent Pump along with Motor Make : Kirloskar**	02 nos.
a)	**For Pump**	
1	head	60m
2	discharge	04 m^3/hr
3	input	1.79KW
4	RPM	2810
b)	**For Motor**	
1	KW/HP	3.7/5
2	RPM	2850
3	Volt	415+/-10%.
iii.	**Air Compressor with 10 HP Motor**	ELGI HORIZON
1	Capacity	420 ltrs
2	Max W/Pr.	12kg/cm^2

SN	Description	Parameter
3	Test Pr.	19.8 kg/cm^2
4	Required outlet pressure	5 kg/cm^2
5	DG Set320 KVA	Kala Genset
iv.	**Effluent Transfer Pump with 01HP Motor**	02 nos
1	Head	11.5m
2	Speed	2700 RPM
3	Capacity	2.5 lps.
v.	**Air Blower with 3HP Motor Make : Evarest Blower**	02 nos.
a)	**For Pump**	
1	Speed	1310 RPM
2	Capacity	80 m^3/hr
3	Pressure	0.40 kg/cm^2
b)	**For Motor**	
1	Speed	1430 RPM
2	Volt	415+/-10%.
vi.	**Sludge Pump with 1HP Motor**	02 nos.
1	Head	11.5m
2	Speed	2700 RPM
3	Capacity	2.5 lps.
vii	**Filter Feed Pump with 1.5HP Motor**	02 nos.
1	Head	24m
2	Speed	2760 RPM
3	Capacity	1.6 lps
viii	**Motor (Dosing Pump)**	
1	Capacity	1000 LPH
2	Pressure	5kg/cm^2.
ix.	**Dosing Pump Model- IMP 104**	03 nos.
1	Supply	A/C 230V/50Hz.
2	Flash Mixer	-
3	Oil Skimmer	-
4	Connected Electrical Load	220 KW Approx
5	Supply	200A, 415 Volt

SEQUENCE OF OPERATION:

Complete train with required number of coaches will move through the plant. Following operations will be performed automatically in the sequential order bythe fixed stations.

- On entering the plant, Magic Eye stations (I & II) will sense the entry and speed of coach into the plant. Plant starts in auto mode.
- Pre-rinse station sprays water on both sides of the coach for loosening the dirt particles on the coach panel.
- Mopping station-I will remove excess water from coach surface.
- Detergent spray station will spray detergent solution on both sides of the coach.
- The coaches will pass through three horizontal brushes per side with

detergent spray (which are held at different height) for cleaning the portion of the coach above the window and turn under of the coaches.

- The coaches will pass through one pair of vertical half brush for cleaning of windows, window seal and window bars and three pair of vertical full brushes with detergent spray for brushing of entire side of coach.
- The coaches will pass through on pair of vertical full brush with water spray for cleaning the detergent residue which are reacted with all the dire and grime.
- The final rinse station will spray water with nozzle placed perpendicular and at angle to coach surface for final cleaning of the surface of the coaches.

- Mopping station-II will clean the excess water on coach surface.
- A Magic eye station-III will sense the exit of the train from the plant after washing process. Auto wash cycle will be switched off.

As per AT Book, details of consumptions of various elements on per coach basis(average values based on 1000 coaches washed)

SN	Elements	Consumption per coach
1	Total water inclusive of fresh water	290 to 300 ltrs
2	Fresh Water	58 to 60 ltrs
3	Detergent	0.073 to 0.075 ltrs
4	Alum powder	8 to 10 g
5	Poly electrolyte	0.25 to 0.5 g
6	Chlorine	3 to 5 cc

WATER LOSS CALCULATION AT ACWP/CP:

SN	Item	Calculation	Parameter
A.	At 08:00 hrs on 17.01.2018		
1	Total Cycle Water	OHT+ETT+ECT 100000+25000+100000*1.55/3	176670 ltrs.
B.	At 16:00 hrs on 19.01.2018		
1	Total Cycle Water	OHT+ETT+ECT 100000+25000+100000*1.12/3	162330 ltrs.
C.	From 17.01.2018 at 08:00 hrs to 19.01.2018 at 16:00 hrs		
1	Total water loss	176670 – 162330	14340 ltrs.
2	Plant runs	-	73 min
3	Total water consumed	52 * 73/60 m^3	63.27 m^3.
D.	Water loss due to coach washing	(14340/63270) * 100 %	22.67 % (Approx).

CHEMICAL CONSUMPTION AT ACWP/CP:

Calculation of Detergent (Alkaline with pH value 6.5 to 8) Consumption for Coach Washing:

SN	Item	Calculation	Parameter
A.	From 08.01.2018 at 16:00 hrs to 20.01.2018 at 10:00 hrs		
1	Total detergent consumed	4 drums	120 ltrs
2	Total nos. of coaches washed during this period		759 nos.
3	Total time taken for washing		365 min.
4.	Detergent consumption per coach	120/759	0.158 rs.

Calculation of Alum Powder (Solution 500 gm/50 ltrs) Consumption for ETP:

SN	Item	Calculation	Parameter
1	To produce water treated		20000 ltrs
2	Alum Powder required		500 gm
3	For treated water Alum Powder required	300 ltrs	7.5 gm.

Calculation of Lime Powder (Solution 100 gm/50 ltrs) Consumption for ETP:

SN	Item	Calculation	Parameter
1	To produce water treated		20000 ltrs
2	Alum Powder required		100 gm
3	For treated water Alum Powder required	300 ltrs	1.5 gm.

Calculation of Poly Electrolyte (30Gm/50Lts) consumption for ETP

SN	Item	Calculation	Parameter
1	To produce water treated		20000 ltrs
2	Poly Electrolyte required		30 gm
3	For treated water Alum Powder required	300 ltrs	0.45 gm.

Calculation of Cost for outside washing of rake consisting of 21 coaches:

SN	Conventional Method	Cost (Rs.)	Through ACWP	Cost
1	Cost of Chemicals Requirement – 2.1 lts (0.1 lts/Coach) Cost of 2.1 lts @ Rs. 108/Lt.	226.80	Cost of Chemicals Requirement – 1.58 lts (0.075ltr/Coach) Cost of 1.58 lts @ Rs. 70/Lt.	110.00
2	Cost of Water Requirement – 8400 lts. (400 lts/Coach) Cost of 8400 lts @ Rs. 4/100 lts.	336.00	Cost of Water Requirement – 1260 lts (60ltr/Coach) Cost of 1260 lts. @ Rs. 4/100 lts.	50.40
3	Cost of Electricity	NIL	Cost of Electricity Requirement – 74 Units Cost of 74 Units @ Rs. 8/Unit	592.00

4	Cost of Equipment	100.00	Cost of Equipment	80.00
			Equipment Cost – Rs. 1,60,000/Year	
5	Labor Cost Deployment of Man –05 nos. Wages/man –Rs 632.00 including PF + ESI	3160.00	Labor Cost Deployment of Staff – 03 nos./shift Average Salary – Rs.40000/Month	500.00
TOTAL		3822.80	TOTAL	1332.40

OPERATIONS SEQUENCE of ETP (Effluent Treatment Plant)

- **Press Oil Skimmer Switch to ON for round the clock – it removes any type ofoil from dirty water.**
- **Press each Air Blower switch in alternate way to ON every four hours round the clock because to supply sufficient oxygen to aerobic bacteria in reaction tank.**
- **Press all three dosing switches to ON (Before Press make sure Alum (1:100),Lime (1:100) & Poly electrolyte (Adequate quantity) solution is prepared).**
- **Press Effluent Transfer Pump switch1/2 to ON.**
- **Press flash mixer switch to ON.**
- **Press Sludge Pump1 & Sludge Pump2 switch to ON for 2-3 min/each hour normally or when required to transfer sludge from settling tank to sludge holding tank. Back flow of sludge is required by sludge pump2 from sludge holding tank to reaction tank by the operation of flow valve to develop aerobic bacteria at reaction tank.**
- **Press Filter Feed Pump switch to ON when intermediate tank is full of water.**
- **Press Filter Press Feed Pump to ON when sludge removing is required from sludge holding tank.**
- **Normally MPV (Multi Port Valve) will be in filter mode. Backwash is required two times in a day for 20 min each and rinse is required after each backwash for 15min for both the filters (Sand filter & Carbon filter).**

TEST RESULT OF TREATED WATER OF ETP AT ACWP/CP:

SN	Parameter	Concentration		CPCB Standards for Discharge of Environmental Pollutants to Inland Surface Water
		Sample No.1/ ACWP	Sample No.2/ ACWP	
1	pH Value	7.8	7.8	5.5 – 9.0
2	Total Solid(TS) in mg/100ml	64.4	64.0	10
3	Total Dissolved Solid(TDS) in mg/ 100ml	59.5	59.0	-
4	Total Volatile Solid(TVS) in mg/100ml	18.8	16.8	-

CAPACITY OF ETP:

AS per Company representative rate of treated water generation approximately 100000 ltrs/24hrs. As per AT book, water loss due to washing is 20%.

COMPONENTS OF ETP:

- **Oil Skimmer- separate oil and grease from effluent water.**
- **Effluent Transfer Tank- capacity 25000 ltrs.**
- **Effluent Collection Tank- capacity 100000 ltrs.**
- **Effluent Transfer Pump- Effluent transfer from effluent collection tank to Flash MixerChamber.**
- **Dosing Pump 1,2& 3- add alum, lime & poly electrolyte solution with effluent waterat flash mixer chamber.**
- **Flash mixer.**
- **Tube settling tank 1&2.**
- **Reaction Tank (Capacity- Approx- 22500 ltrs.)**
- **Intermediate Tank (Capacity- Approx- 6390 ltrs.)**
- **Sludge Holding Tank**
- **Sludge Transfer Pump**
- **Filter Feed Pump**
- **Filter Press Feed Pump**
- **Air Blower**
- **Sand & Carbon Filter along with Multi port valve(MPV)**
- **Sludge Cake Formation Apparatus**

FEEDBACK FORM

Feedback Form Regarding Outside Coach Cleaning Quality:

Sub: Inspection Report Regarding Outside Cleaning of Coaches at ACWP/CP

Train No. :
Date :
Pit No. :
Batch :

Feedback Form

Sl. No.	Coach No.	Cleaning above the window	Cleaning below the window	Windows, window seal &window bars cleaning	Turn under cleaning	Door outside cleaning	Remark
1							
2							

V for very good, G for good, S for satisfactory and P for poor may be used.

Signature of Batch Supervisor

FLOW CHART OF AUTOMATIC COACH WASHING PLANT

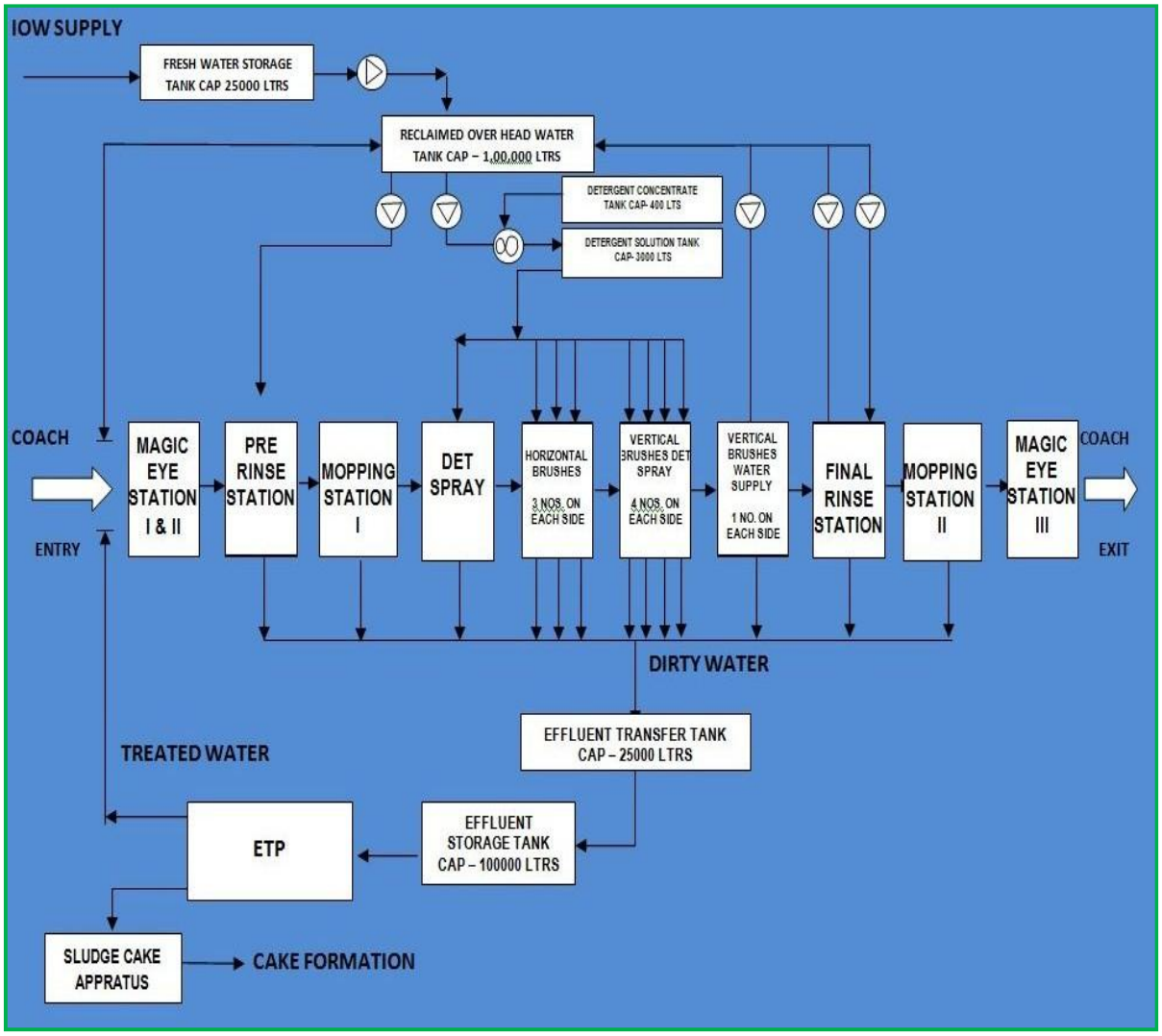

FLOW CHART OF CHEMICAL DOSING

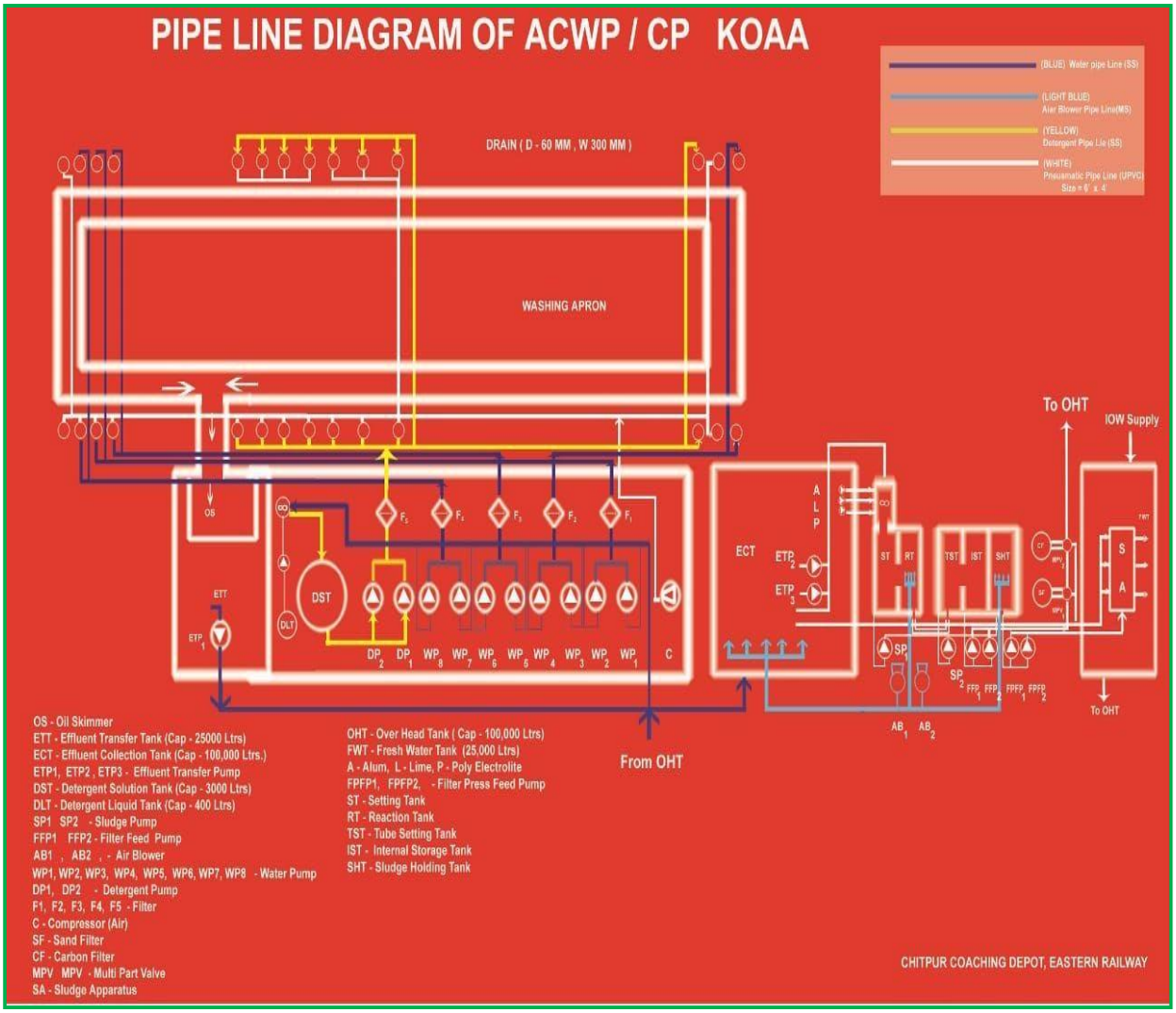

PIPE LINE DIAGRAM OF ACWP/CP

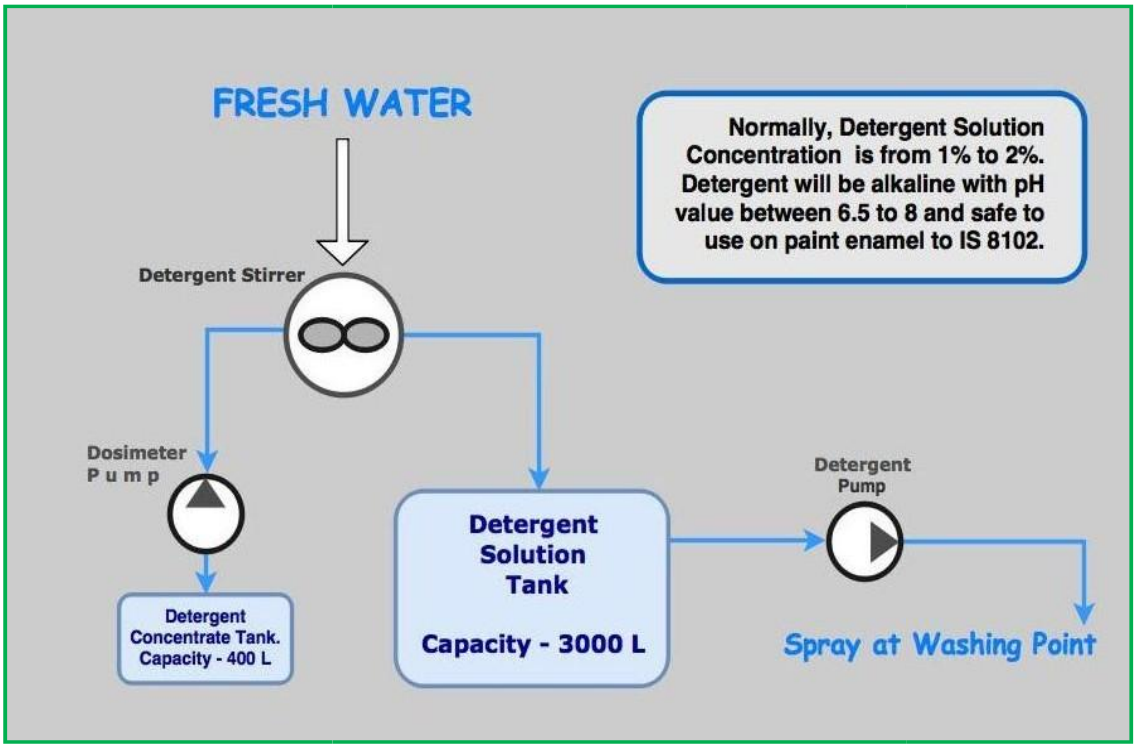

LAYOUT OF CONTROL ROOM AT ACWP/CP

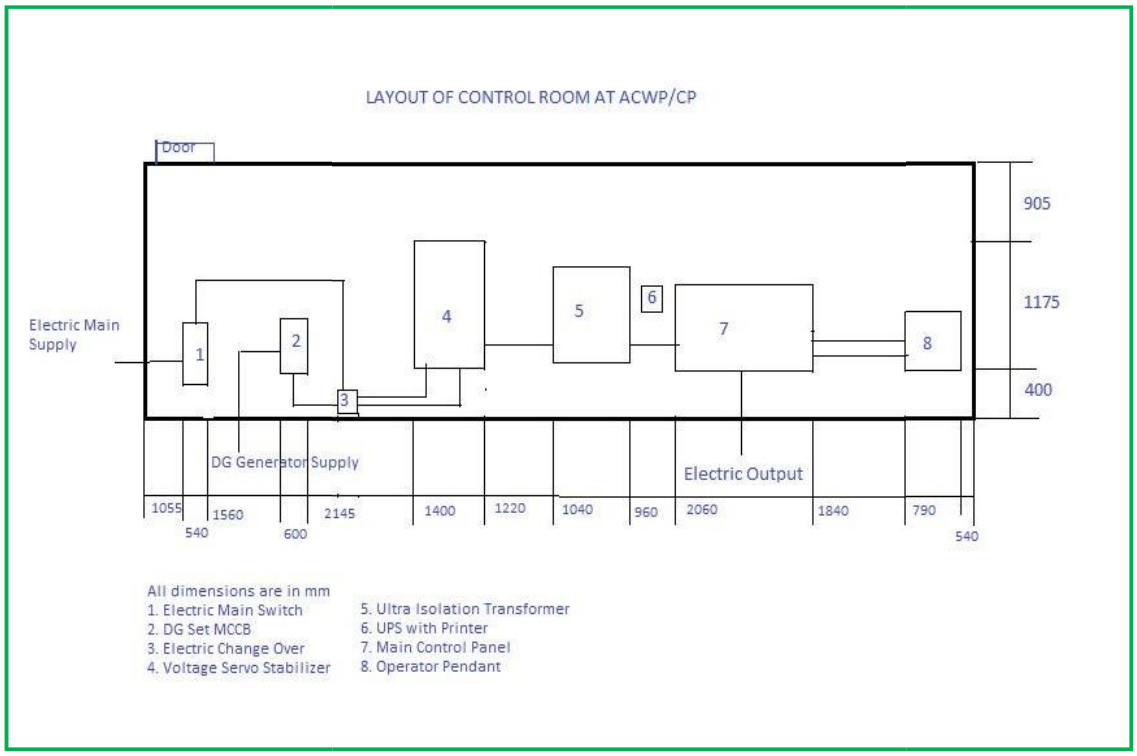

Side view OF Coach Washing Plant AT Kolkata Terminal,Chitpur

Front view OF Coach Washing Plant AT Kolkata Terminal,Chitpur

Control Panel Room OF Coach Washing Plant AT Kolkata Terminal, Chitpur

Control Panel Room OF Coach Washing Plant AT Kolkata Terminal, Chitpur

Effluent Treatment Plant of Coach Washing Plant AT Kolkata Terminal, Chitpur

Pump House of Coach Washing Plant AT Kolkata Terminal, Chitpur.